US010077974B2

(12) **United States Patent**
Kwiatkowski et al.

(10) **Patent No.: US 10,077,974 B2**
(45) **Date of Patent: Sep. 18, 2018**

(54) **HIGHLY MOBILE VEHICLE SUSPENSION SYSTEM WITH BLAST MITIGATION FEATURES**

(71) Applicant: **Pratt & Miller Engineering and Fabrication, Inc.**, New Hudson, MI (US)

(72) Inventors: **Kevin R. Kwiatkowski**, Ann Arbor, MI (US); **Kris Houghton**, Plymouth, MI (US); **Celyn M. Evans**, Milford, MI (US); **Benjamin J. Wright**, New Hudson, MI (US)

(73) Assignee: **PRATT & MILLER ENGINEERING AND FABRICATION, INC.**, New Hudson, MI (US)

(*) Notice: Subject to any disclaimer, the term of this patent is extended or adjusted under 35 U.S.C. 154(b) by 0 days.

(21) Appl. No.: **15/245,724**

(22) Filed: **Aug. 24, 2016**

(65) **Prior Publication Data**

US 2018/0058821 A1 Mar. 1, 2018

(51) **Int. Cl.**

F41H 7/04	(2006.01)
B60G 3/20	(2006.01)
B60K 17/354	(2006.01)
B60K 17/16	(2006.01)
B62D 21/11	(2006.01)
B60G 3/00	(2006.01)

(Continued)

(52) **U.S. Cl.**

CPC ***F41H 7/04*** (2013.01); ***B60G 3/00*** (2013.01); ***B60G 3/145*** (2013.01); ***B60G 3/20*** (2013.01); ***B60G 17/00*** (2013.01); ***B60K 17/16*** (2013.01); ***B60K 17/354*** (2013.01); ***B62D 5/14*** (2013.01); ***B62D 21/11*** (2013.01); ***B62D 63/04*** (2013.01); *B60G 2200/13* (2013.01); *B60G 2200/144* (2013.01); *B60G 2200/31* (2013.01); *B60G 2500/00* (2013.01); *B60Y 2200/24* (2013.01)

(58) **Field of Classification Search**

CPC . F41H 7/04; F41H 7/042; F41H 7/044; F41H 7/00; B60G 3/20; B60G 3/145; B60G 2200/144; B60G 2200/31; B60G 7/008; B60G 7/006; B60K 17/354; B60K 17/16; B62D 21/11; B60Y 2200/24

USPC 280/124.1, 124.128, 124.129

See application file for complete search history.

(56) **References Cited**

U.S. PATENT DOCUMENTS

3,395,672 A * 8/1968 Ruf B60F 3/0007 180/24

4,484,765 A * 11/1984 Appelblatt B60G 3/14 180/233

(Continued)

FOREIGN PATENT DOCUMENTS

WO WO-2010128297 A1 11/2010

OTHER PUBLICATIONS

Ricardo Ocelot; 2009; 6 pages.

Primary Examiner — Keith J Frisby

(74) *Attorney, Agent, or Firm* — Brinks Gilson & Lione

(57) **ABSTRACT**

In one embodiment, there is disclosed a modular, blast resistant suspension module for an armored vehicle. Each suspension module has a first and second axle assembly. The first axle assembly has a Short-Long Arm (SLA) suspension system pivotally connected to a blast resistant differential housing and the second axle assembly has a Road Arm (RA) suspension system pivotally connected to the differential housing. The suspension modules may be used to form 4×4 or 8×8 vehicle configurations.

15 Claims, 12 Drawing Sheets

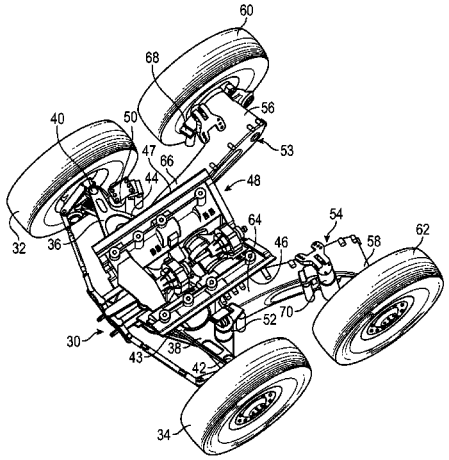

(51) **Int. Cl.**

B62D 5/14	(2006.01)
B60G 3/14	(2006.01)
B60G 17/00	(2006.01)
B62D 63/04	(2006.01)

(56) **References Cited**

U.S. PATENT DOCUMENTS

4,492,282	A *	1/1985	Appelblatt	B62D 49/0621 180/68.1
6,435,071	B1 *	8/2002	Campbell	B60G 3/18 180/41
8,033,208	B2	10/2011	Joynt et al.	
8,146,478	B2	4/2012	Joynt et al.	
8,430,196	B2 *	4/2013	Halliday	B60K 5/00 180/89.1
2011/0138994	A1 *	6/2011	Joynt	F41H 7/042 89/36.08
2012/0043152	A1	2/2012	Jacob-Lloyd	

* cited by examiner

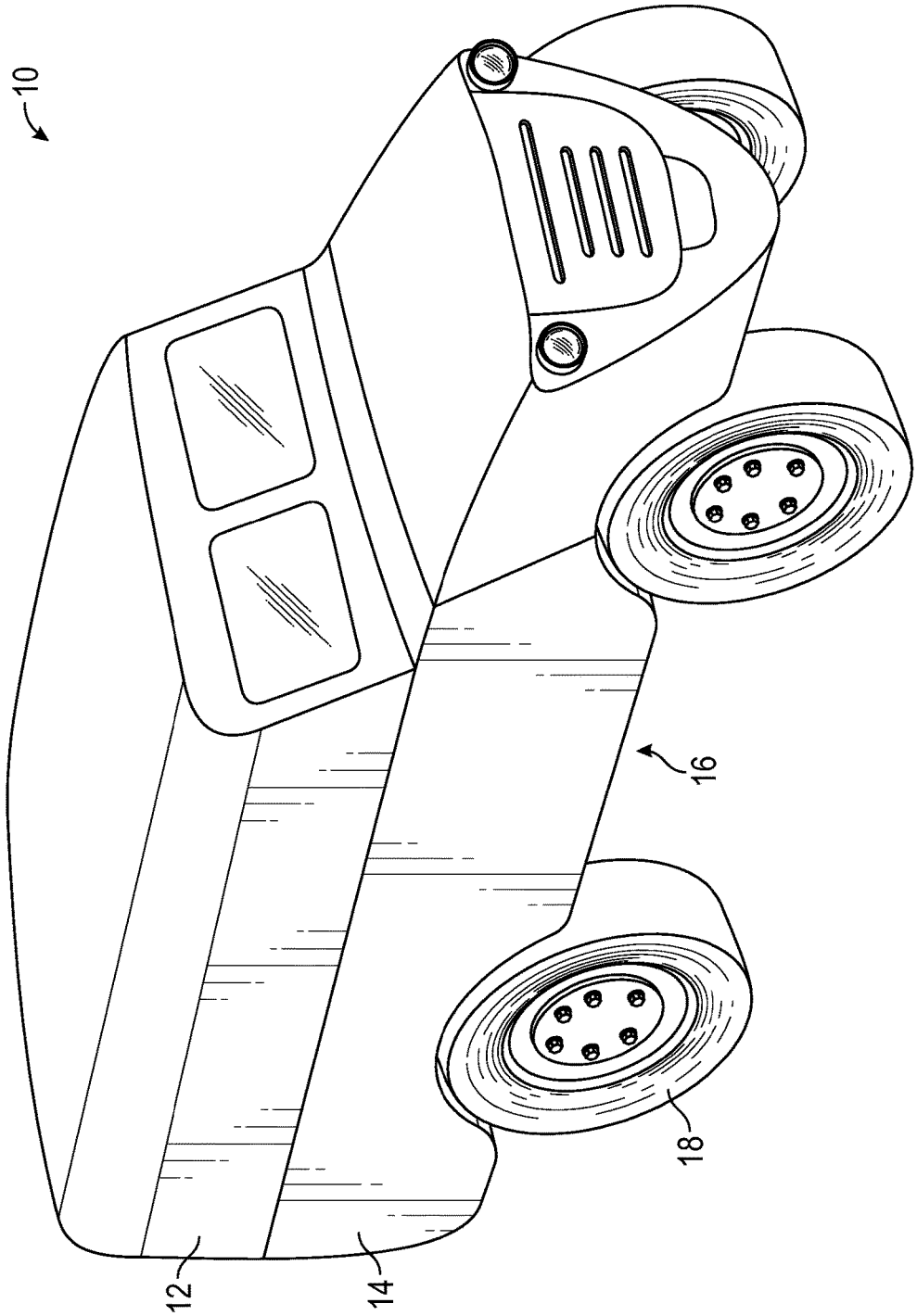

FIG. 1

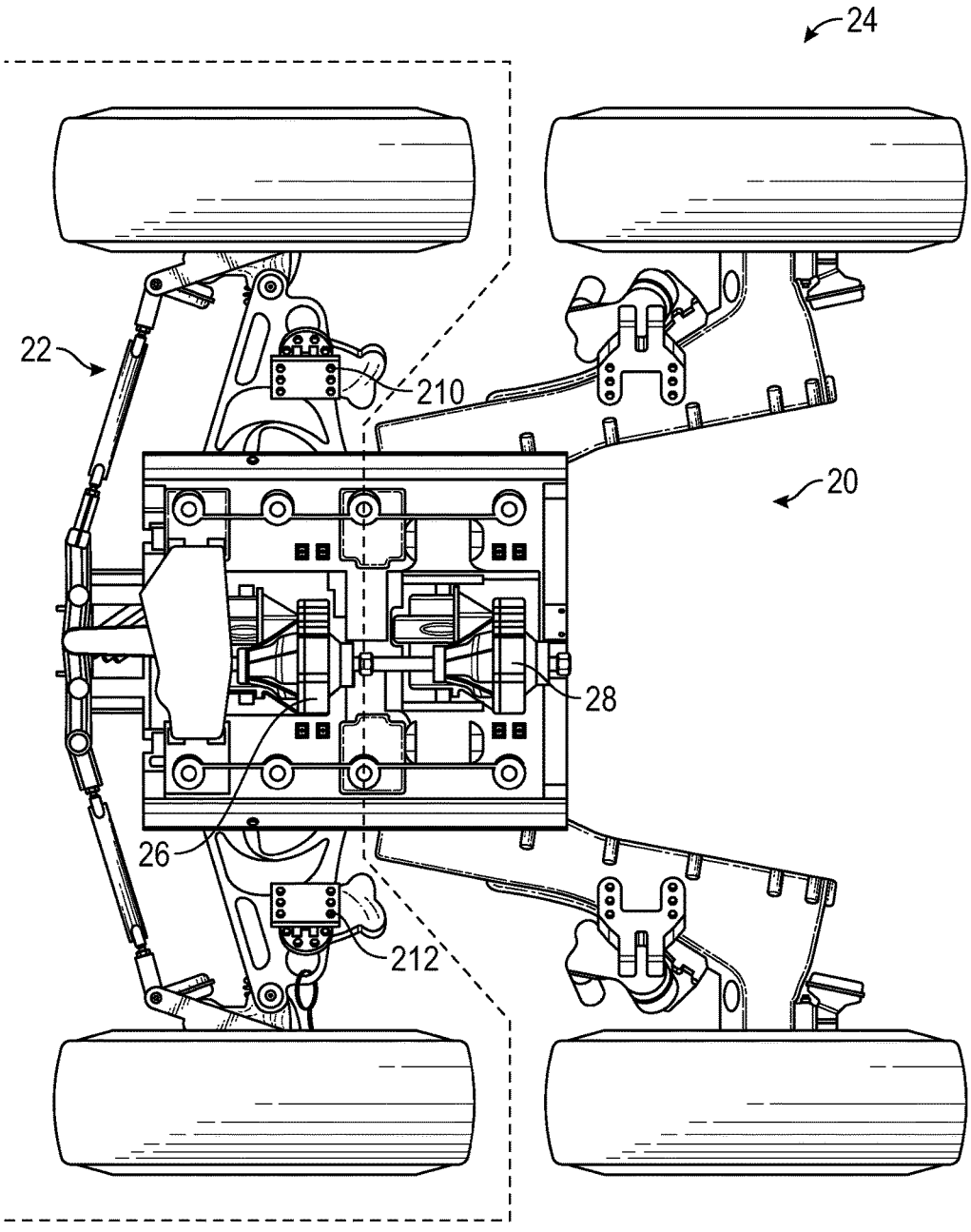

FIG. 2

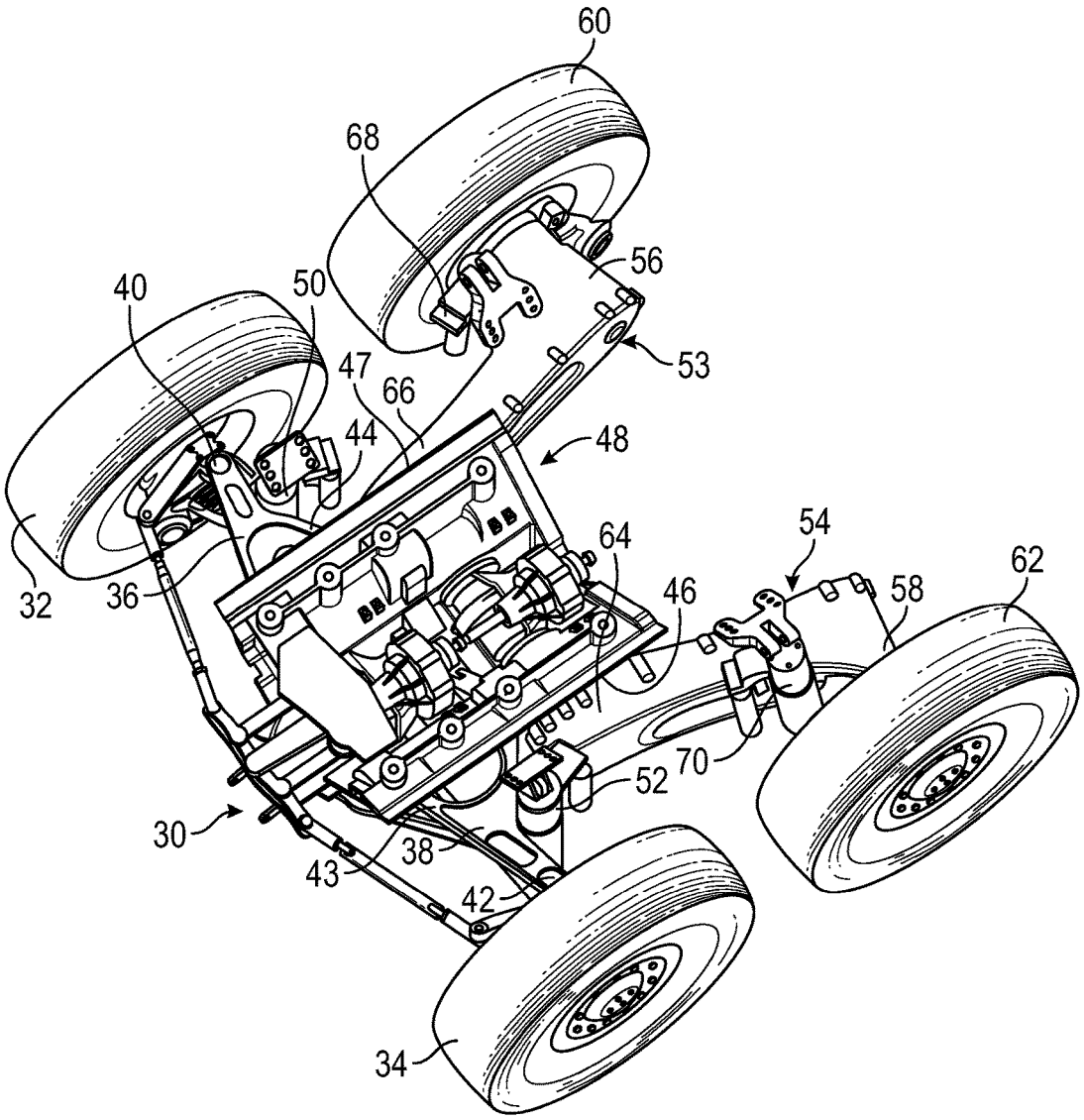

FIG. 3

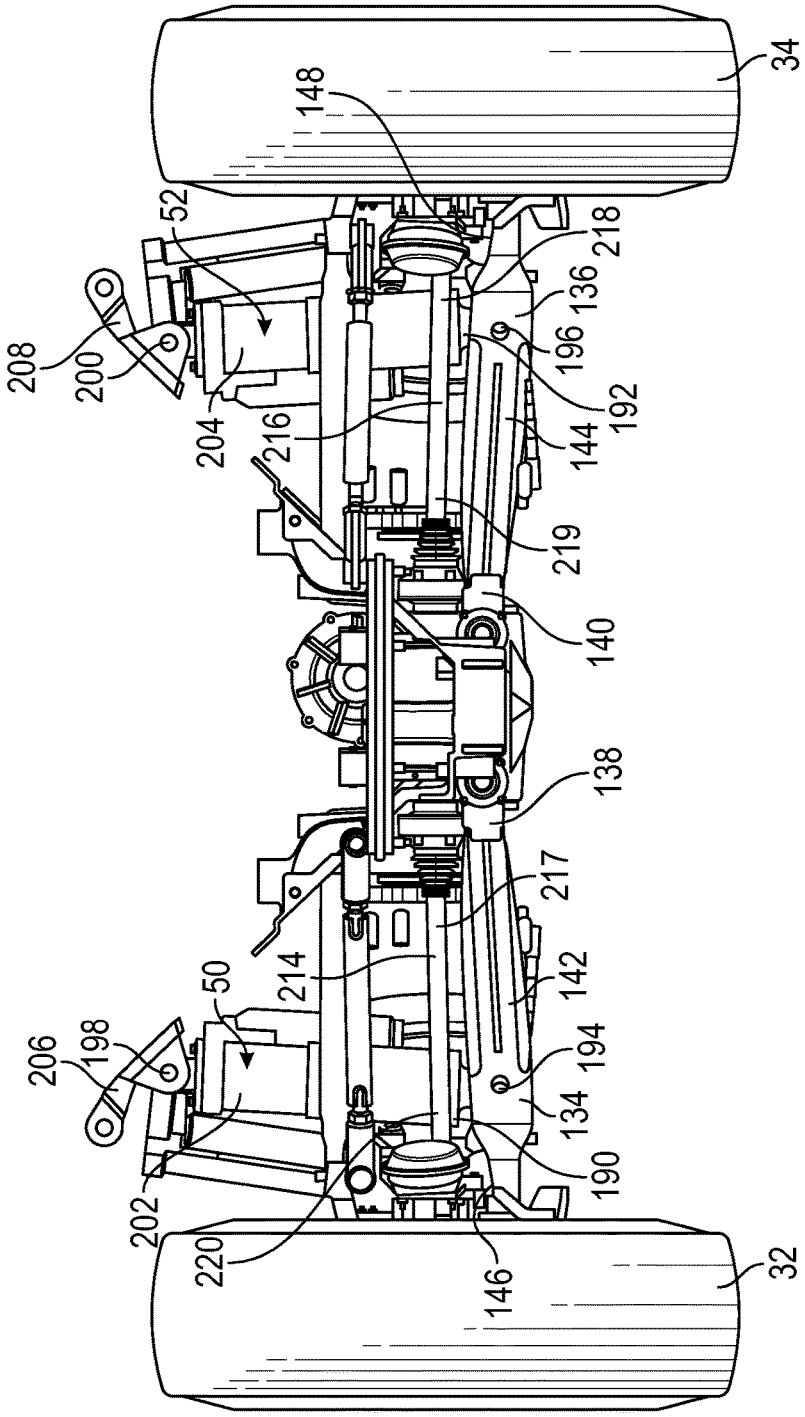
34
148
52
218
136
196
208
200
192
204
216
144
219
140
138
217
214
142
50
206
198
194
134
190
202
220
146
32

FIG. 4

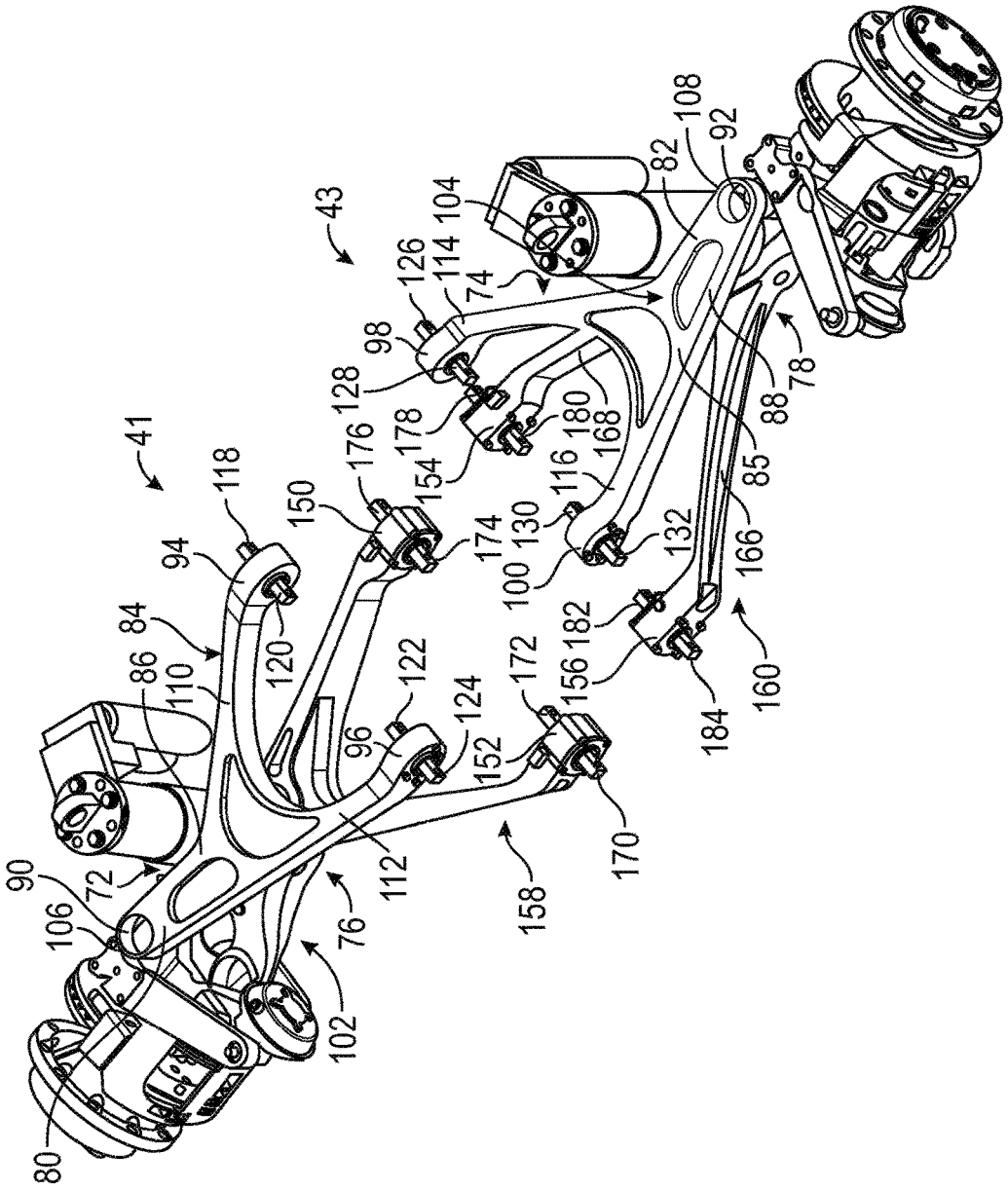
41
43
72
74
76
78
80
82
84
85
86
88
90
92
94
96
98
100
102
104
106
108
110
112
114
116
118
120
122
124
126
128
130
132
150
152
154
156
158
160
166
168
170
172
174
176
178
180
182
184

FIG. 5

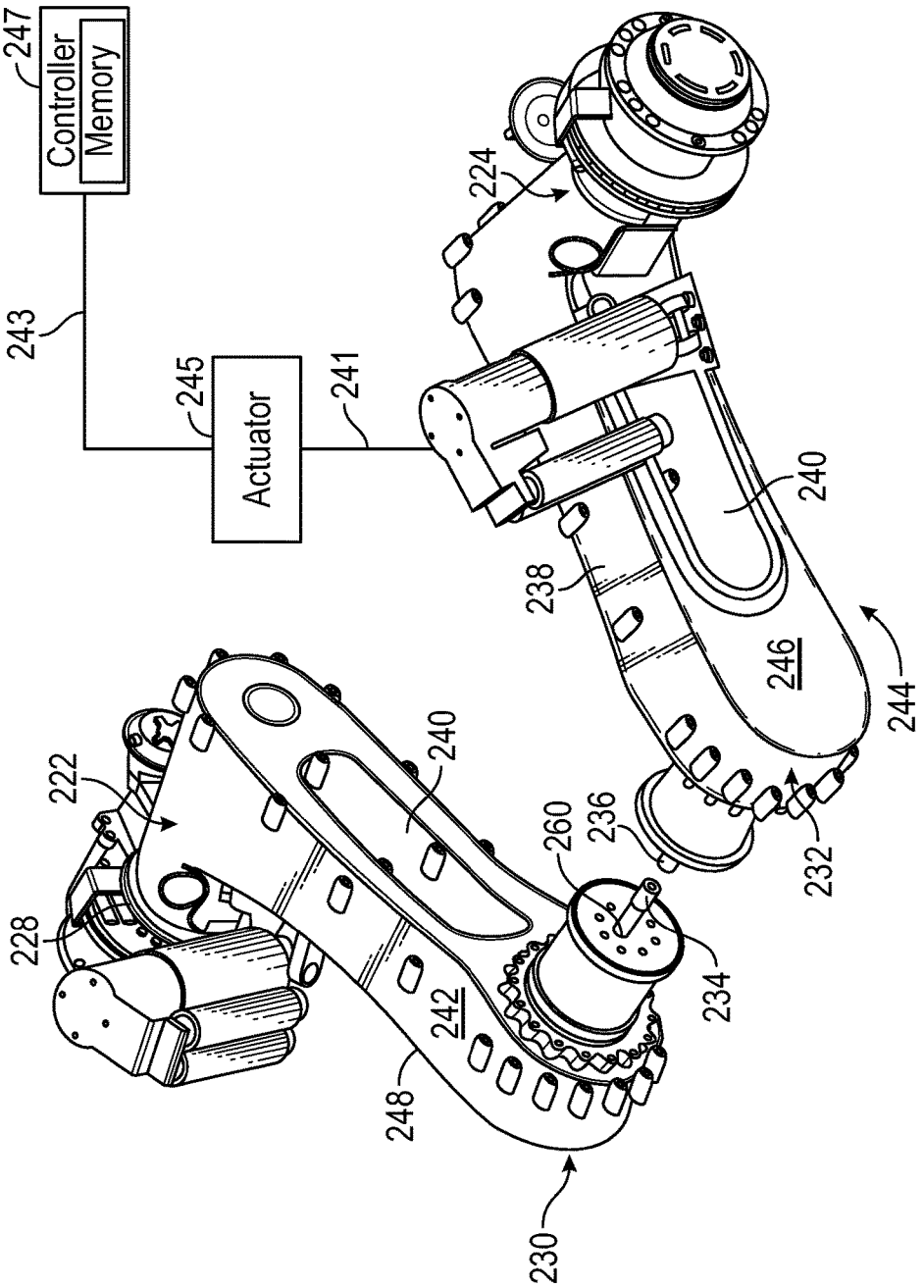
247
Controller
Memory
243
245
Actuator
241
224
240
238
246
244
222
240
260
236
232
228
234
242
248
230

FIG. 6

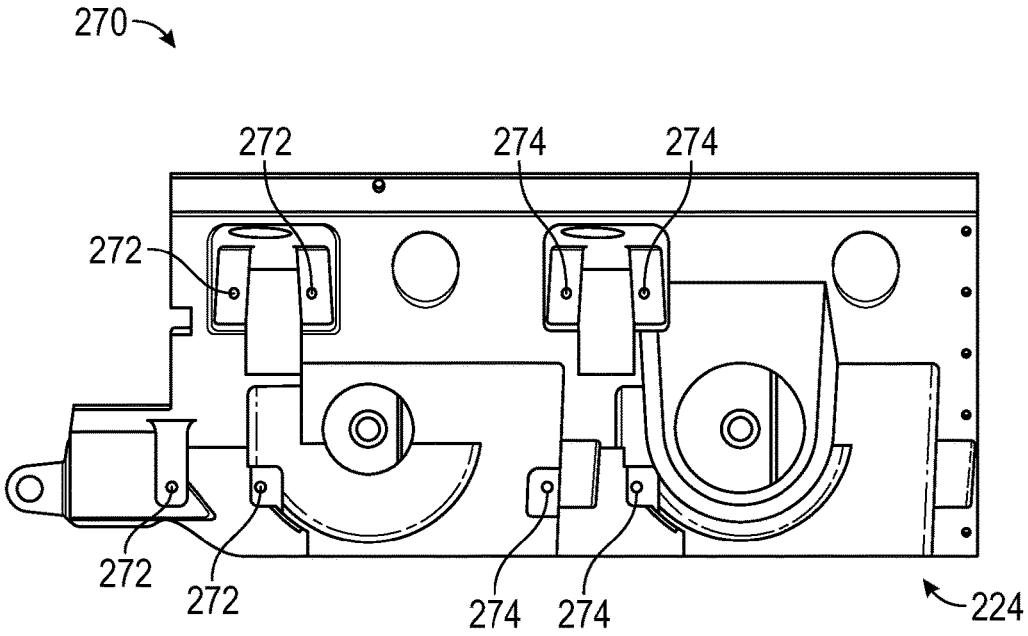

FIG. 7

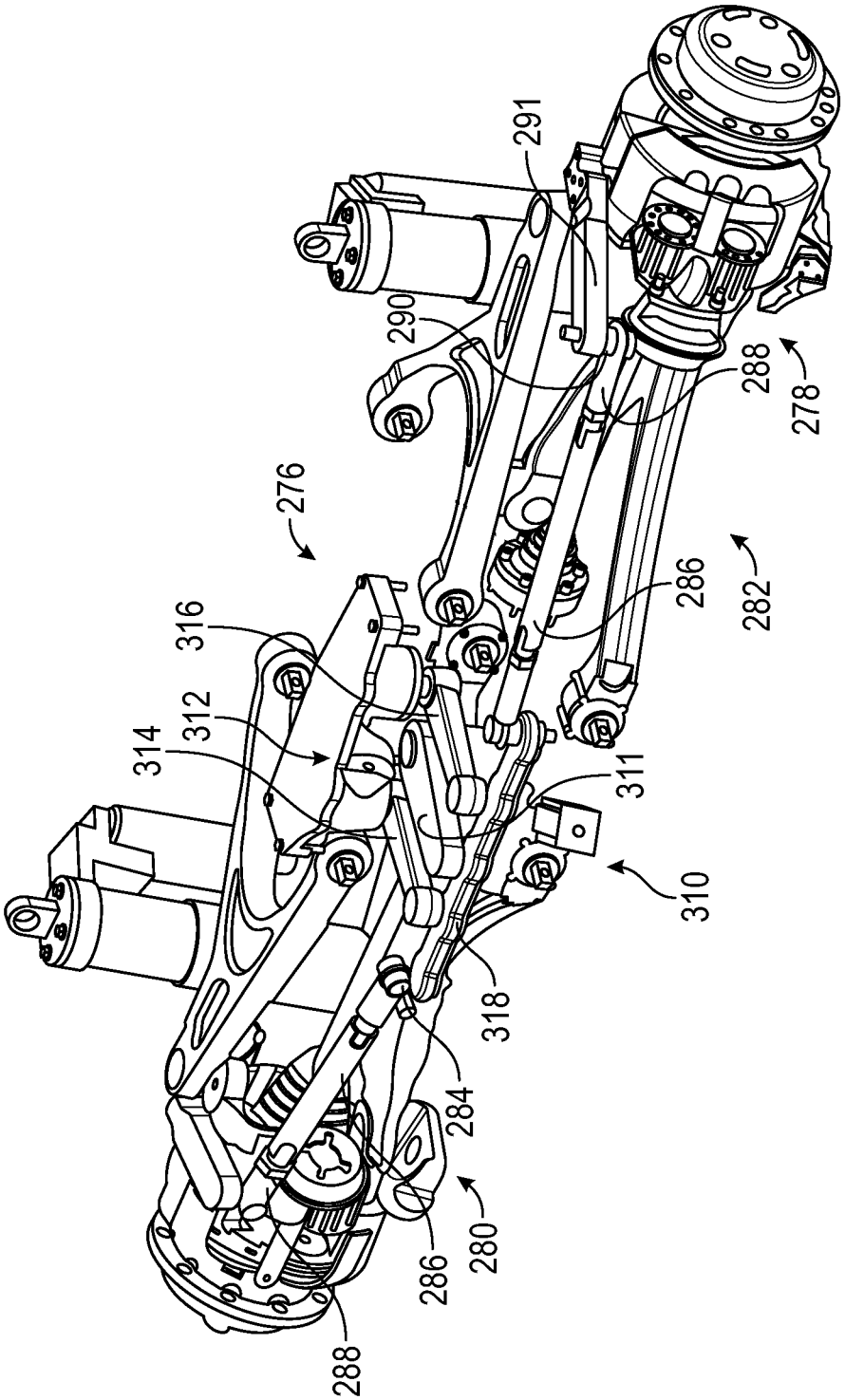
291
290
288
278
276
286
282
316
312
314
311
310
318
284
280
286
288

FIG. 8

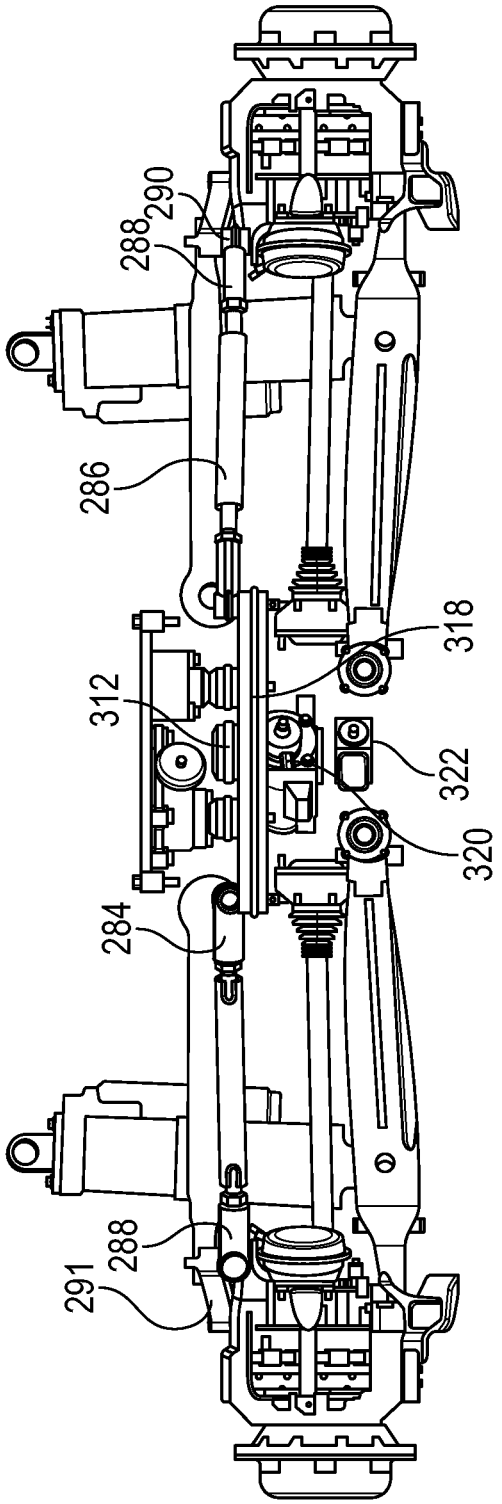

FIG. 9

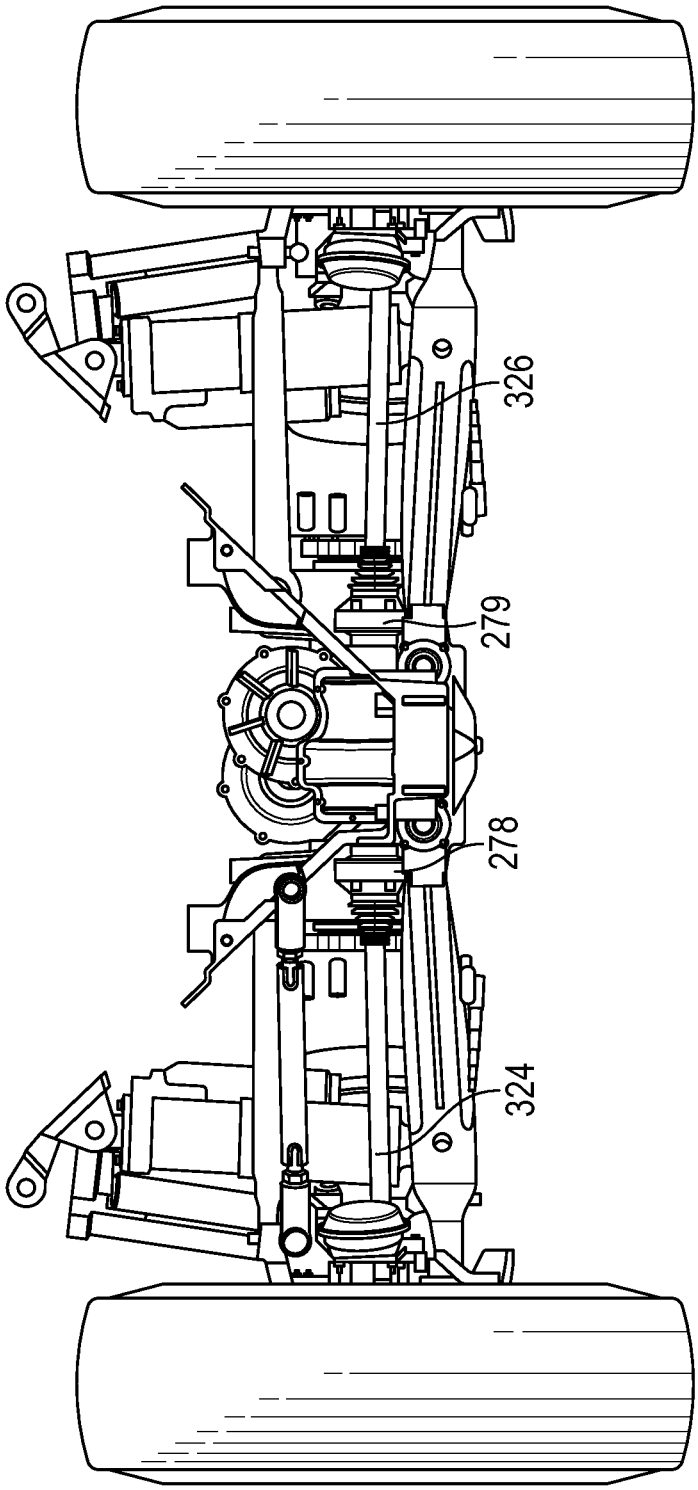

FIG. 10

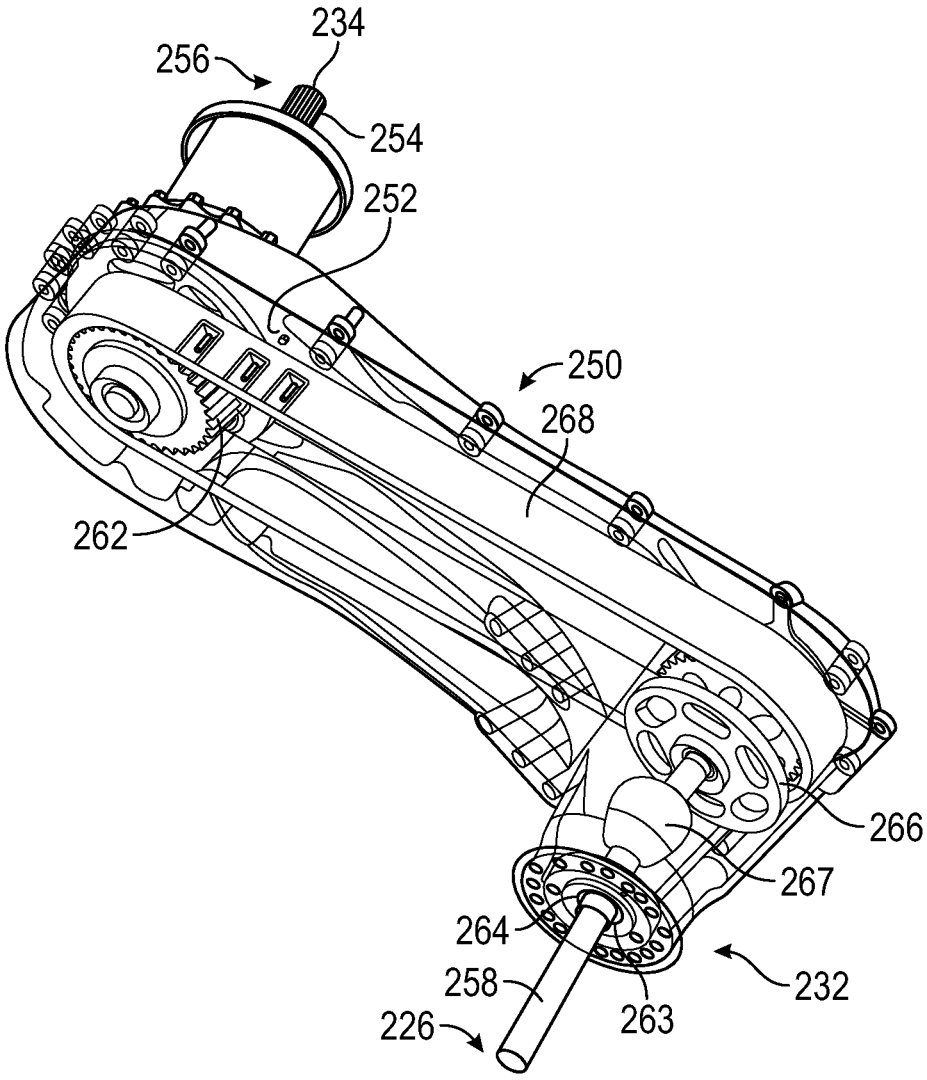

FIG. 11

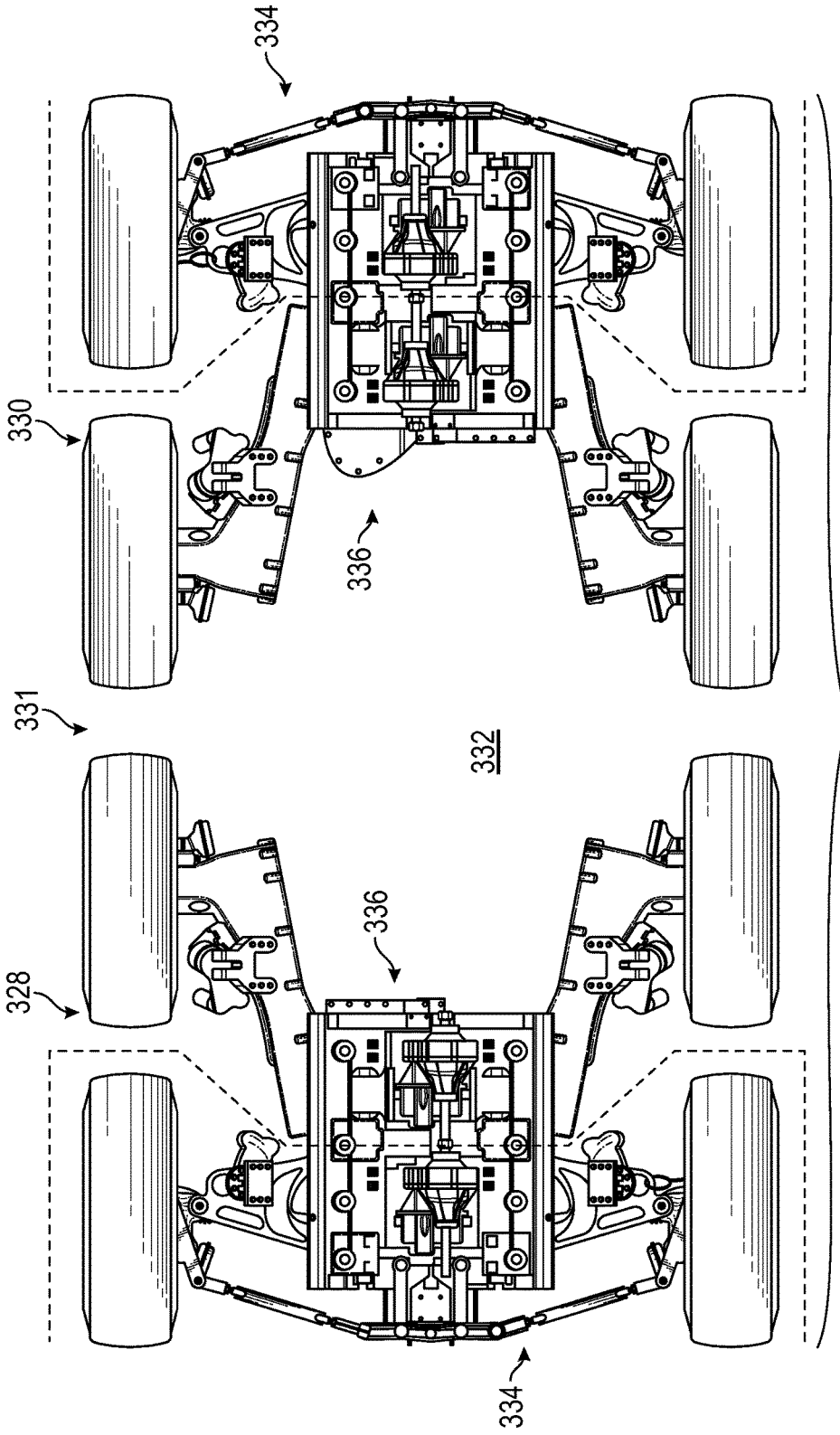

FIG. 12

HIGHLY MOBILE VEHICLE SUSPENSION SYSTEM WITH BLAST MITIGATION FEATURES

STATEMENT OF GOVERNMENT INTEREST

This disclosure was made in part with Government support by The United States Department of the Army. The Government has certain rights in the disclosure.

TECHNICAL FIELD

This disclosure relates to suspension systems, including those that may be used with vehicles such as military vehicles. In one embodiment, the disclosure relates to a suspension system module designed for a military vehicle to enhance mobility performance and which is integrated with blast mitigating structures of the military vehicle. Each suspension system module includes a Short-Long Arm (SLA) suspension for a first axle assembly and a Road Arm (RA) suspension for a second axle assembly. Both suspension systems are connected to a blast mitigating differential housing. The suspension module includes a steering system for the first axle assembly as well as drive train components (differentials, drive shafts, CV's etc.) necessary to drive wheels at least on the first and second axles. The suspension system includes blast mitigating properties to clean up the underbody profile of a military vehicle and facilitate dissipation of blast energy from an IED or mine.

BACKGROUND

Existing military vehicles are generally made of a monocoque construction mounted on a set of wheels. In recent years, there has been a move toward blast resistant hull designs that deflect the blast force away from the vehicle hull. However, such designs have not been entirely optimal in protecting the suspension systems of such vehicle with the result that the blast force does not significantly harm the vehicle hull, but does damage the suspension and drive systems so that the occupants are stranded in an incapacitated vehicle.

Improvements are needed in suspension and drivetrain protection, so that the vehicle is driveable after a blast event and the occupants are not left stranded in a disabled vehicle after such an event. The suspension system should provide maximum rebound and jounce, while surviving blast events. The suspension system should also permit selectable disengagement of damaged wheel assemblies so the vehicle maintains maximum drivability during combat situations.

BRIEF DESCRIPTION OF THE DRAWINGS

FIG. **1** is a perspective view of a vehicle including a blast resistant suspension according to one embodiment of the disclosure.

FIG. **2** is top plan view of a suspension module with a blast mitigating differential housing according to one embodiment of this disclosure;

FIG. **3** is a perspective view of the suspension module of FIG. **1**;

FIG. **4** is a front view of the suspension module of FIG. **1**;

FIG. **5** is a detailed view of a Short Long Arm (SLA) suspension assembly according to one embodiment of the disclosure;

FIG. **6** is a detailed perspective view of a Rear Arm (RA) suspension assembly according to one embodiment of the disclosure;

FIG. **7** is side view of a blast mitigating differential housing according to one embodiment of the disclosure showing suspension mounting points;

FIG. **8** is a perspective view of an SLA suspension assembly showing drive axles and a steering system according to one embodiment of the disclosure;

FIG. **9** is an exploded front view of the SLA suspension of FIG. **8**

FIG. **10** is an assembled front view of the SLA suspension assembly of FIG. **8**;

FIG. **11** is a cutaway view of the RA of FIG. **6**.

FIG. **12** is a bottom view of a vehicle equipped with two suspension modules and blast mitigating differential housings in an 8×8 configuration according to one embodiment of the disclosure.

DETAILED DESCRIPTION

All figures and examples herein are intended to be non-limiting; they are merely exemplary iterations and/or embodiments of the claims appended to the end of this description. Modifications to structure, materials, the order of steps in procedures, etc., are contemplated.

Referring now to the Drawings wherein like numbers refer to like structures, FIG. **1** shows a vehicle **10** which is shown as a military vehicle. The vehicle may include a monocoque body **12** comprised of a blast resistant sheet material with an upper hull **14** with an underside **16**. For purposes of this application, hulls are understood to be the main frame or the main body of a vehicle such as an all terrain vehicle, an armored personnel carrier, or a tank. In this embodiment, the underside may be substantially V shaped. The underside has suspension and wheel assemblies **18** attached to the underside and driveably connected to a drive train to move the vehicle as required by an operator.

FIG. **2** is a top plan view of a suspension system module **20**, having a first axle assembly **22** and a second axle assembly **24**. The first axle assembly is driveably connected to a first differential **26** and the second axle assembly is driveably connected to a second differential **28**.

FIG. **3** is a perspective view of the suspension system module of FIG. **2**. The first axle assembly includes a steering assembly **30** to turn front axle assembly wheel and tire assemblies **32**, **34**, respectively. The first axle assembly further includes Short-Long Arm (SLA) assembly **36**, **38** in pivotal connection at a first end **40**, **42** to each of the first axle wheel and tire assemblies. Each SLA is pivotally connected at a second end **43**, **44** to opposing sides **46** of a differential housing **48**. Each SLA further includes a spring and damper assembly **50**, **52**. The second axle assembly includes Road Arm Suspension Assemblies (RA) **53**, **54** driveably connected at a first end **56**, **58** to wheel and tire assemblies **60**, **62**, respectively. Each RA is pivotally connected at a second end **64**, **66** respectively, to opposing sides of the differential housing and driveably connected to a drive train differential within the differential. Each RA may further include a spring and damper assembly **68**, **70**, respectively.

Turning now to FIGS. **4** and **5**, the structure of the SLA will be described. Specifically, in this non limiting embodiment, each SLA has an upper arm **72**, **74**, and a lower arm **76**, **78** respectively. Each of the upper arms is of the same length as each other and each of the lower arms is of the same length as each other. However, the upper arms are of a shorter length than the lower arms, hence the designation

"Short-Long Arm". Each upper arm has a first end **80**, **82**, and an opposed second end **84**, **84**, separated by a length **86**, **88**, respectively. Each upper arm first end is pivotally connected at an upper arm outer pivot **90**, **92**, respectively, to a separate wheel end assembly. Each upper arm is pivotally connected at its second end by upper arm inner pivots **94**, **96**, **98**, and **100**, respectively. As shown in FIG. **5**, the upper arm may be a Y shaped member **102**, **104**, with the outer pivot at the base **106**, **108** of the Y member, and the inner pivots may be carried on each opposed SLA arm members **110**, **112**, **114**, **116**, respectively. Each of the inner arm pivots may include axial pivots **118**, **120**, **122**, **124**, **126**, **128**, **130**, **132**, respectively, to facilitate pivotal movement about an axis. One skilled in the art understands that any pivot connection may be utilized, and the embodiment depicted is merely exemplary, not limiting. It will be appreciated that in certain embodiments, the right upper arm may be of a different length than the left upper arm, and the right lower arm may be of a different length than the left lower arm. This arrangement may be used where vehicle design requires such dimensioning of the upper and lower arms to provide suitable steerability of the vehicle. In addition, it is also contemplated that Macpherson suspension or a Multilink suspension system could also be used.

The lower arms of the SLA have a similar construction as the upper arms. Specifically, each lower arm **76**, **78**. Each lower arm has a first end **134**, **136**, and an opposed second end **138**, **140**, separated by a length **142**, **144**, respectively. Each lower arm first end is pivotally connected at a lower arm outer pivot **146**, **148**, respectively, to a separate wheel end assembly. Each lower arm is pivotally connected at its second end by lower arm inner pivots **150**, **152**, **154**, and **156**, respectively. As shown in FIG. **5**, the lower arm may be a Y shaped member **158**, **160**, with the outer pivot at the base of the Y member, and the inner pivots may be carried on each opposed lower SLA arm members **166**, **168**, respectively. Each of the lower inner arm pivots may include axial pivots **170**, **172**, **174**, **176**, **178**, **180**, **182**, **184**, respectively, to facilitate pivotal movement about an axis. One skilled in the art understands that any pivot connection may be utilized, and the embodiment depicted is merely exemplary, not limiting. ent depicted is merely exemplary, not limiting.

The spring and damper assemblies **50**, **52** are pivotally attached at a first end **190**, **192** respectively to the respective lower arm at pivots **194**, **196**, and, as seen in FIGS. **2** and **3**, pivotally attached by pivots **198**, **200** at a second end **202**, **204** to plates **206** and **208** which may be equipped with apertures **210**, **212** so that the second end may be affixed as by fasteners to the vehicle underside or a frame member, respectively.

The first axle assembly may further be provided with axles **214** and **216** which are each drivable connected to their respective wheel end assemblies as at first ends **218** and **220**, respectively. Each axle is driveably connected at their respective second ends to a differential in any manner, and will be hereinafter described.

FIGS. **6** and **11** will now be described. The second axle assembly includes a pair of opposed RAs. Each RA has a Road Arm first end **222**, **224** with Road arm outer pivots **226**, **228**, respectively. Each RA has a Road Arm second end **230**, **232**, with Road Arm inner pivots **234**, **236**, respectively. In this embodiment, the RA first and second ends are in opposed, substantially parallel orientation with each other and separated by a body portion **238** oriented at substantially a right angle to the first and second ends. Each of the outer pivots is driveably connected to a respective second axle assembly wheel end assembly, and each of the inner pivots is driveably connected to the second axle assembly differential **26**. The body has an aperture **240** along its length which dissipates blast energy during a blast event.

Turing now to FIG. **11**, it can be seen that each RA has a top **242** and bottom **244** separated by sidewalls **246**, **248** extending substantially unbroken therebetween to define an outer shell **250** and an inner space **252**. Each inner pivot is an input shaft **254**, which may be splined at its first end as at **256** to ensure driveable connection to the differential and each outer pivot is an output shaft **258**. The input shaft extends through an aperture **260** in the outer shell into the inner space.

The RAs are engagable or disengageable by an operator depending upon conditions in which the vehicle is operated. Specifically, controller **247** includes a memory such as ROM, PROM, EPROM, EEPROM, FLASH or any other memory with instructions stored in memory. The controller is electronically connected to an actuator **245**, which may be hydraulic, pneumatic, electronic or any other actuator, through a controller area network (CAN) **243** or any other electronic connection. The actuator is operably connected as at **241** to the damper assembly. When an operator desires or when conditions require, a command signal is transmitted from the controller to the actuator, which, depending upon what actuator is used, either moves a fluid to or from the damper or electronically activates the dampers to raise the RA and its tire assembly away from ground engagement. This movement of the RA may also be used to enhance turning and mobility of the vehicle.

Each outer pivot is an output shaft extending through an aperture **264** in the outer shell into the inner space. The apertures through which the input shaft and output shaft extend may be provided with a seal **263** to retain lubrication and prevent dirt and debris from entering the inner space. Each output shaft is driveably connectable to an output gear **266** in the inner space through a CV joint **267** so that the output shaft may be pivotal about the CV joint. The rotation of the input gear is transmitted to the output gear by a drive chain **268** extending between the input gear and the output gear.

FIG. **7** is a side view of a blast mitigating differential housing **270** according to one embodiment of the disclosure showing suspension mounting points. Specifically, the differential housing is generally V shaped and houses a first and second differential as previously described. The differential housing connects the suspension and the drivetrain to the rest of the vehicle structure. This housing is the subject of co-pending U.S. patent application Ser. No. 14/621,342 which is incorporated herein in its entirety by reference. Suspension mounting points **272** are for the SLA and suspension mounting points **274** are for the RA.

FIGS. **8**, **9** and **10** all depict various aspects of the SLA according to one embodiment of the disclosure showing the steering mechanism **276** and the CV joint assemblies **278**, **279** used to drive the wheel end assemblies of the first axle assembly.

Specifically, and referring to FIGS. **8** and **9**, the first axle assembly may include tie rod assemblies **280** and **282** respectively. Each tie rod has an inner tie rod end **284**, a tie rod adjustment sleeve **286** and an outer tie rod end **288**. The outer tie rod ends are pivotally connected at tie rod end ball joints **290** to a connecting linkage **291** and thence to a respective wheel end assembly. The assembly of the tie rods and the connecting rod forms a steering linkage assembly **310**. The first axle assembly may further be provided with a pitman and idler support **312** having a pitman **311**, and idler arms **314** and **316** in spaced apart relationship to accommo-

date a centerlink **318** to translate motion to the centerlink and thereby turn the wheel end assemblies. This may be accomplished by a hydraulic steering gearbox **320** actuated by an electric motor **322** so that turning motion of a steering wheel is translated into directional turning of the wheel end assemblies.

FIG. **10** further depicts an embodiment of the SLA showing the CV joint assemblies **278**, **279** connected to the differential housing through CV joints. Specifically, each CV assembly includes a drive axle **324**, **326** that is driveably connected to a respective wheel end assembly. The respective drive axles transmit rotational force from the respective differential to the respective wheel end to drive the vehicle.

It is understood that what has hereto been describe is a 4×4 configuration utilizing one suspension module. In the field of military vehicles, the suspension module as described may be used in an 8×8 configuration **298**, as shown in FIG. **12**. Specifically a first suspension module **300** and second suspension module **302** may be oriented in spaced apart relation to each other along the length of the vehicle such that an open space **304** exists between them. In this embodiment, the first suspension module and second suspension module are oriented such that the first axle assembly **306** of the first suspension module and the first axle assembly **308** of the second suspension module are outermost axle assemblies **310**, and the first suspension module second axle assembly and the second suspension module second axle assembly are innermost axle assemblies **312**.

Although the steps of the above-described processes have been exemplified as occurring in a certain sequence, such processes could be practiced with the steps performed in a different order. It should also be understood that certain steps could be performed simultaneously, that other steps could be added, or that certain steps could be omitted. In other words, the descriptions of the processes are provided for the purpose of illustration, and should not limit the claimed invention.

Accordingly, it is to be understood that the above description is intended to be illustrative and not restrictive. Many embodiments and applications other than the examples provided would be apparent upon reading the disclosure. The scope of the invention should be determined with reference to the appended claims along with the full scope of equivalents. It is intended that future developments will occur, and that embodiments of the disclosed systems and methods will incorporate and be incorporated with such future developments.

Use of singular articles such as "a," "the," "said" together with an element means one or more of the element unless a claim expressly recites to the contrary.

What is claimed as new and desired to be protected by Letters Patent of the United States is:

1. A suspension system, comprising:
- a suspension module having a first axle assembly and a second axle assembly;
- each axle assembly connected at a first end to a wheel end assembly;
- each suspension module connected to a blast mitigating differential housing;
- the first axle assembly equipped with a Short-Long Arm (SLA) suspension for each wheel end assembly;
- each SLA suspension including an upper arm member and an opposed lower arm member, each upper arm member having a length separating a first end and an opposed second end;
- each lower arm member having a length terminating in a first end and an opposed second end;
- each upper arm member of shorter length than each lower arm member;
- the first end of each upper arm member terminating in an upper arm outer pivot;
- each upper arm outer pivot pivotally connectable to a first pivot on the wheel end assembly;
- the first end on each lower arm pivot terminating in an outer pivot;
- each lower arm outer pivot pivotally connectable to a second pivot on the wheel end assembly;
- each second end on each upper arm member terminating in multiple inner pivots;
- each upper arm multiple inner pivots pivotally connectable to the differential housing;
- the first axle assembly further equipped with an SLA suspension spring and damper assembly pivotally connected at one end to one of the upper and lower arm members;
- the second axle assembly equipped with a Road Arm (RA) suspension;
- the RA suspension having a length separating a first end and a second end;
- the first end having an RA outer pivot driveably connectable to a wheel end assembly;
- the second end having an RA inner pivot;
- the RA inner pivot connectable to the differential housing;
- the RA suspension further equipped with an RA spring and damper assembly;
- the RA spring and damper assembly pivotally attached at one end to an associated RA;
- the RA suspension length having an aperture therethrough extending along the length between the first and second ends.

2. The suspension system of claim **1**, wherein the first axle assembly comprises:
- a steering assembly;
- the steering assembly including tie rods;
- each tie rod pivotally connected at a first end to a wheel end assembly and pivotally connected at a second end to a center link;
- the center link interactively connected to a Pitman arm;
- the Pitman arm interactively connected to a Pitman and idler support;
- the Pitman and idler support equipped with opposed idler arms and a hydraulic steering gear box; and
- the hydraulic steering gearbox actuated by an electric motor.

3. The suspension system of claim **1**, wherein:
- the RA suspension has a top and bottom separated by sidewalls extending substantially unbroken therebetween to define an outer shell and an inner space;
- the outer pivot is an output shaft and each inner pivot is an input shaft;
- the input shaft extending through an aperture in the outer shell into the inner space;
- the input shaft driveably connectable to an input gear in the inner space; each outer pivot is an output shaft extending through an aperture in the outer shell into the inner space;
- the output shaft driveably connectable to an output gear in the inner space;
- the RA suspension further equipped with a drive chain extending between the input gear and the output gear.

4. The suspension system of claim 3, wherein an RA output shaft is driveably connected to an output gear by a constant velocity joint assembly.

5. The suspension system of claim 1, wherein the suspension system further includes an axle driveably connected at one end to a differential in the differential housing, and at an opposite end driveably to the wheel end assembly.

6. The suspension system of claim 5, wherein each axle of the suspension system is driveably connected to the differential by a constant velocity joint assembly.

7. The suspension system of claim 1, further including a controller with memory and instructions; the controller electronically connected to an actuator, the actuator connected to the RA spring and damper assembly; wherein instructions from the controller to the actuator cause the actuator to affect the RA spring and damper assembly to move the RA suspension from an engaged position and a disengaged position.

8. A vehicle, comprising:

at least one transmission differential;

the transmission differential contained within a differential housing;

the differential housing having a blast mitigating profile;

a suspension system, the suspension system including at least one suspension module having a first axle assembly and a second axle assembly;

each axle assembly connected at a first end to a wheel end assembly;

each suspension module connected to a blast mitigating differential housing;

the first axle assembly equipped with a Short-Long Arm (SLA) suspension for each wheel end assembly;

each SLA suspension including an upper arm member and an opposed lower arm member, each upper arm member having a length separating a first end and an opposed second end;

each lower arm member having a length terminating in a first end and an opposed second end;

each upper arm member of shorter length than each lower arm member;

the first end of each upper arm member terminating in an upper arm outer pivot;

each upper arm outer pivot pivotally connectable to a first pivot on the wheel end assembly;

the first end on each lower arm pivot terminating in an outer pivot; each lower arm outer pivot pivotally connectable to a second pivot on the wheel end assembly;

each second end on each upper arm member terminating in multiple inner pivots;

each upper arm multiple inner pivots pivotally connectable to the differential housing;

the first axle assembly further equipped with an SLA suspension spring and damper assembly pivotally connected at one end to one of the upper and lower arm members at one end;

each first axle assembly further includes an axle driveably connected at one end to a differential in the differential housing, and at an opposite end driveably to the wheel end assembly;

the second axle assembly equipped with a Road Arm (RA) suspension;

the RA suspension having a length separating a first end and a second end;

each first end having an RA outer pivot drivably connectable to a wheel end assembly;

each second end having an RA inner pivot;

the RA inner pivot connectable to the differential housing;

the RA suspension further equipped with an RA spring and damper assembly;

the RA spring and damper assembly pivotally attached at one end to an associated RA;

the RA suspension length having an aperture therethrough extending along the length between the first and second ends; and

the RA outer pivot is an output shaft driveably attached to the differential and each RA inner pivot is an input shaft driveably connected to the wheel end assembly.

9. The vehicle of claim 8, wherein the first axle assembly comprises:

a steering assembly;

the steering assembly including tie rods;

each tie rod pivotally connected at a first end to a wheel end assembly and pivotally connected at a second end to a center link;

the center link interactively connected to a Pitman arm;

the Pitman arm interactively connected to a Pitman and idler support;

the Pitman and idler support equipped with opposed idler arms and a hydraulic steering gear box; and

the hydraulic steering gearbox actuated by an electric motor.

10. The vehicle of claim 8, further comprising:

wherein the RA suspension has a top and bottom separated by sidewalls extending substantially unbroken therebetween to define an outer shell and an inner space;

the outer pivot is an output shaft and each inner pivot is an input shaft;

the input shaft extending through an aperture in the outer shell into the inner space;

the input shaft driveably connectable to an input gear in the inner space;

the output shaft extending through an aperture in the outer shell into the inner space; each output shaft driveably connectable to an output gear in the inner space; and

the RA suspension further equipped with a drive chain extending between the input gear and the output gear.

11. The vehicle of claim 8, wherein an RA output shaft is driveably connected to an output gear by a constant velocity joint assembly.

12. The vehicle of claim 8, wherein each axle of the suspension system is driveably connected to the differential by a constant velocity joint assembly.

13. The vehicle of claim 8, wherein the vehicle further comprises:

first and second suspension modules;

the first suspension module in spaced apart relationship to the second suspension module along a length of the vehicle's underside; and

the first suspension module and the second suspension module oriented such that a first axle assembly of the first suspension module and a first axle assembly of the second suspension module are outermost axle assemblies, and a first suspension module second axle assembly and a second suspension module second axle assembly are innermost axle assemblies.

14. The vehicle of claim 8, further comprising:

a controller with memory and instructions; and

the controller electronically connected to an actuator; the actuator connected to the RA spring and damper assembly, wherein instructions from the controller to the actuator cause the actuator to affect the RA spring and damper assembly to move the RA suspension from an engaged position and a disengaged position.

15. The vehicle of claim **8**, wherein the first axle assembly is driveably connected to a first transmission differential and the second axle assembly is driveably connected to a second transmission differential.

* * * * *